January 28, 2015

FLYGT
a xylem brand

Innovative Technology: Development of the Self-cleaning Wet-well

Robert Domkowski
Engineering Consultant

NEW ENGLAND WATER ENVIRONMENT ASSOCIATION
NEWEA
WORKING FOR WATER QUALITY

Innovative Technology: Self-cleaning wetwell

Overview

- Over the years, little investigative work has been attempted in advancing modern wet well designs

- The result: end-users have continued to endure poorly operating sumps

NEWEA
WORKING FOR WATER QUALITY

Innovative Technology: Self-cleaning wetwell

Project introduction:

- Summary of an investigation into the optimum shape and performance of circular sumps with submersible solids-handling pumps in sewage applications

- Providing an in-depth look at the ability of circular sumps to deal with solids normally found in domestic sewage

NEWEA
WORKING FOR WATER QUALITY

Innovative Technology: Self-cleaning wetwell

Project background:

- Simple circular, flat-bottomed wet wells have been employed for decades

- End-users have suffered with pump sumps that became fouled with trash, sludge and settled solids

- Owners routinely spend operating funds cleaning and maintaining wastewater pumps and wet wells

NEWEA
WORKING FOR WATER QUALITY

Innovative Technology: Self-cleaning wetwell

Project objective:

- Evaluate how effectively solids can be removed from wet-wells by pumps in two different sumps

(a) A standard 5’-4” dia. flat-bottom circular wet-well

(b) A wet-well having the geometry of the proto- typical IT station

(c) The effectiveness of a sump mixing device was also tested in both sump examples.

NEWEA
WORKING FOR WATER QUALITY

Innovative Technology: Self-cleaning wetwell

Driving force behind laboratory investigation:

- Fouled wet wells
- Sludge bank deposits
- Foul odor generation
- Choking of pumps
- Need for frequent station cleaning

NEWEA
WORKING FOR WATER QUALITY

Innovative Technology: Self-cleaning wetwell

A view of the basic conventional pump sump

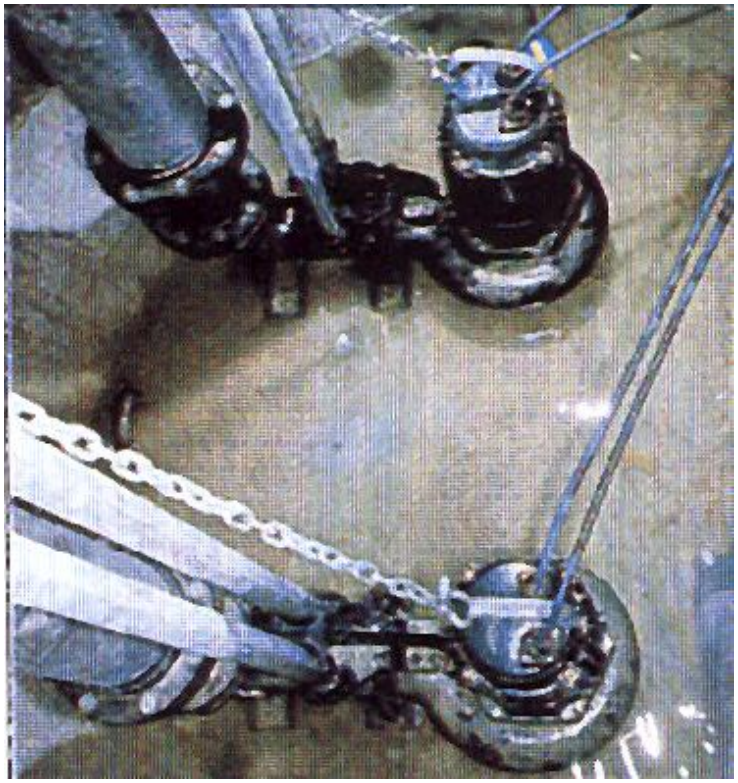

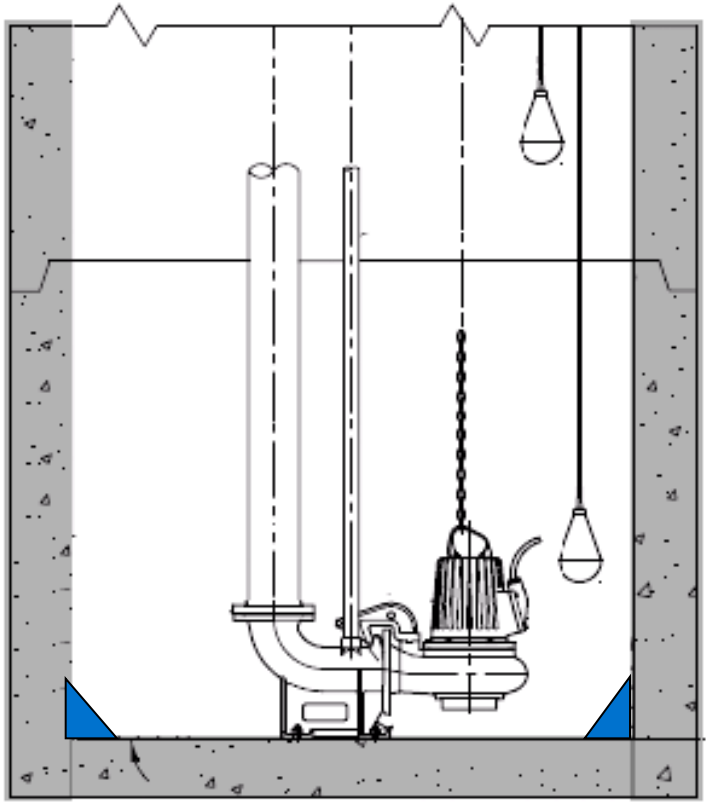

NEWEA
WORKING FOR WATER QUALITY

Innovative Technology: Self-cleaning wetwell

Initial investigation:

Solids-handling pumps w/ 4” dia. suction inlet

- Test clearance dimensions between two pumps while in simultaneous operation
  - Pump clearances of 36-in down to 0-in were examined
  - No noticeable change in pump performance was measured

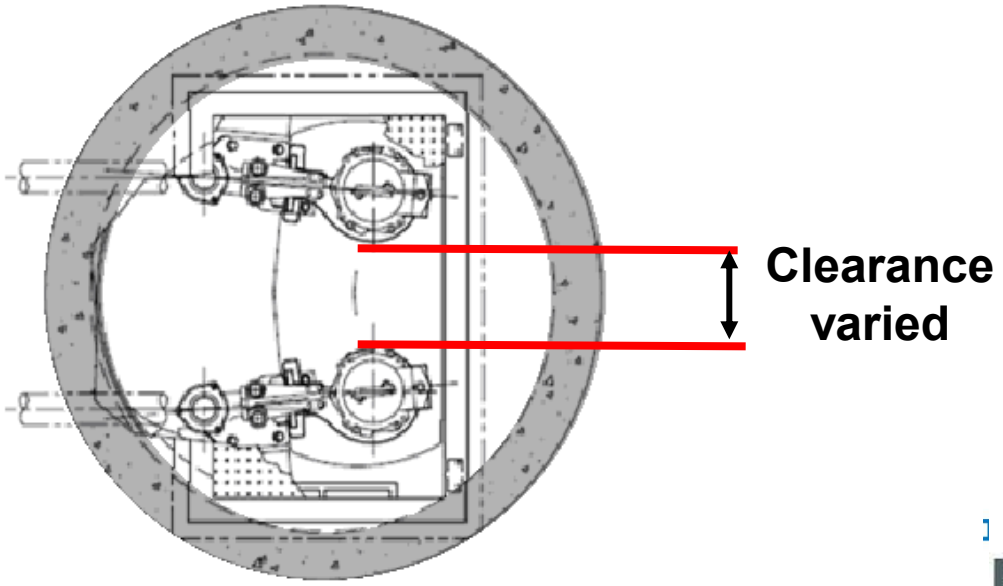

NEWEA
WORKING FOR WATER QUALITY

Innovative Technology: Self-cleaning wetwell

Initial investigation:

Solids-handling pumps w/ 4” dia. suction inlet

- Test various pump inlet-to-floor clearance dimensions
  - Pump performance was measured as floor clearance was varied from 16-in through 1-in.
  - Floor clearance ratio (Clearance / Inlet dia.) of >/= 0.4 delivered unaffected performance (>1.6” clearance)
  - For solids-handling pumps a 3” to 4” clearance is used

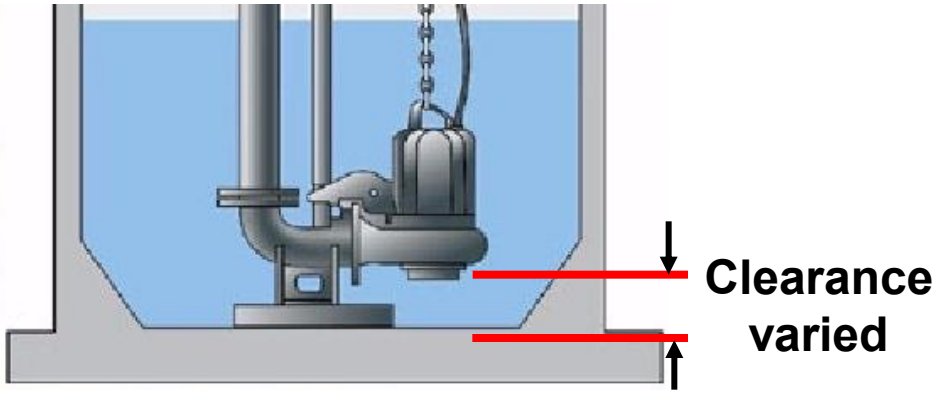

NEWEA
WORKING FOR WATER QUALITY

Innovative Technology: Self-cleaning wetwell

The area of influence: 2-3 x Pump inlet diameter

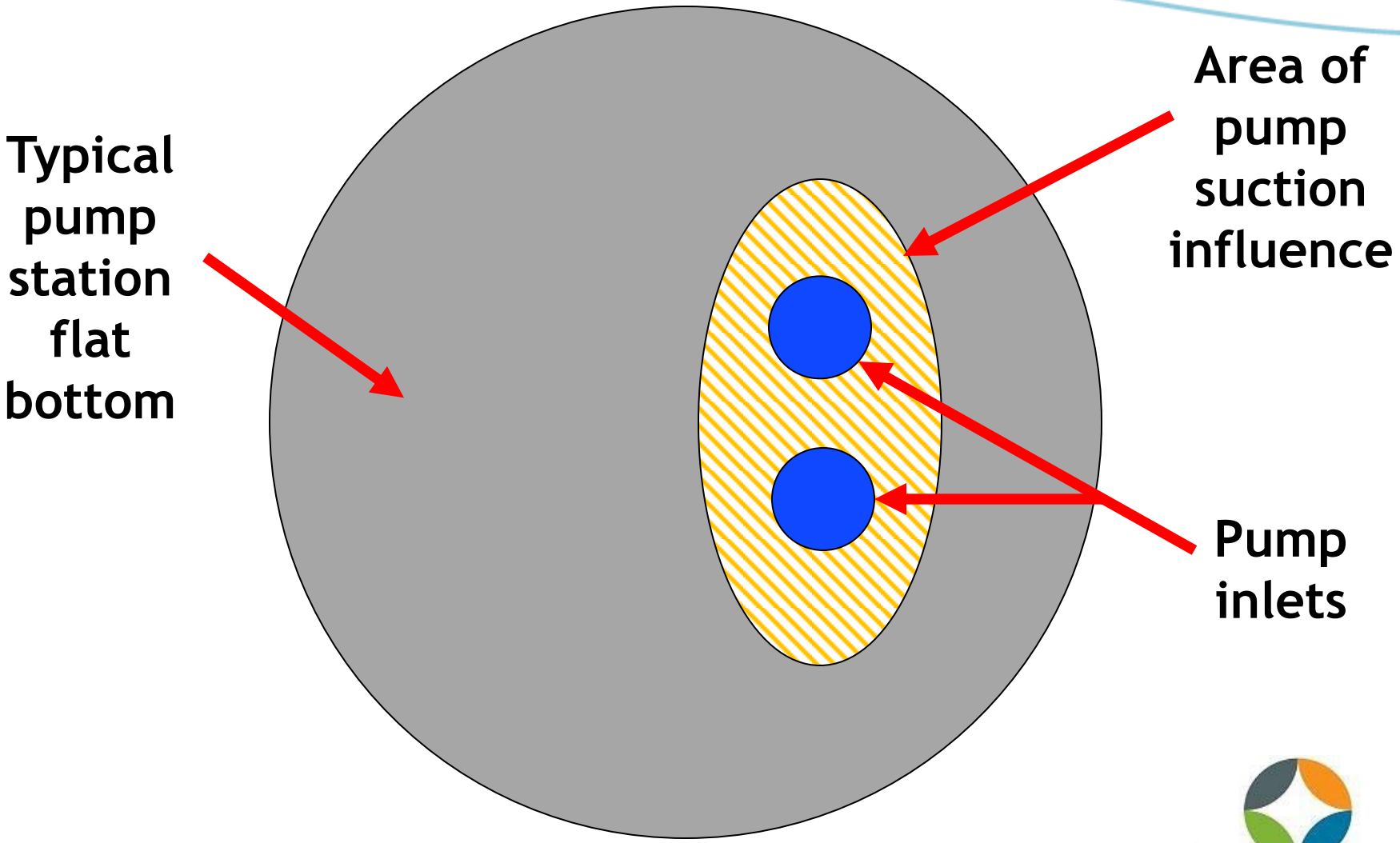

NEWEA
WORKING FOR WATER QUALITY

Innovative Technology: Self-cleaning wetwell

Modification 1:

Place one sloping wall, downstream of pumps

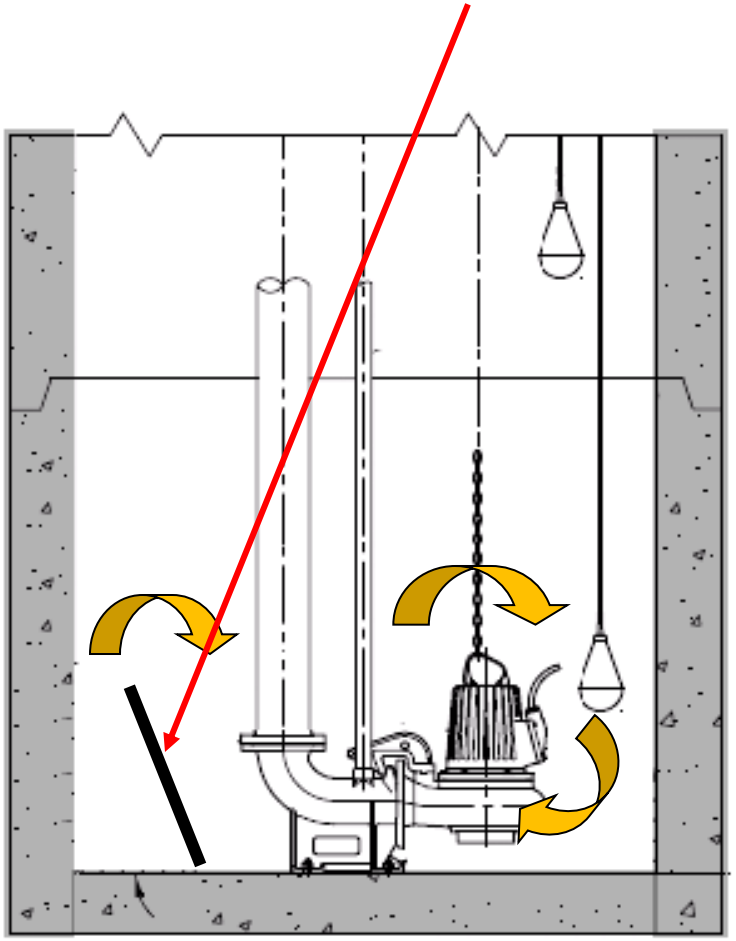

Result:
Power consumption increased 5% due to pre-swirl rotation

NEWEA
WORKING FOR WATER QUALITY

Innovative Technology: Self-cleaning wetwell

Modification 2:

Two sloping walls, one downstream, one up stream from pump

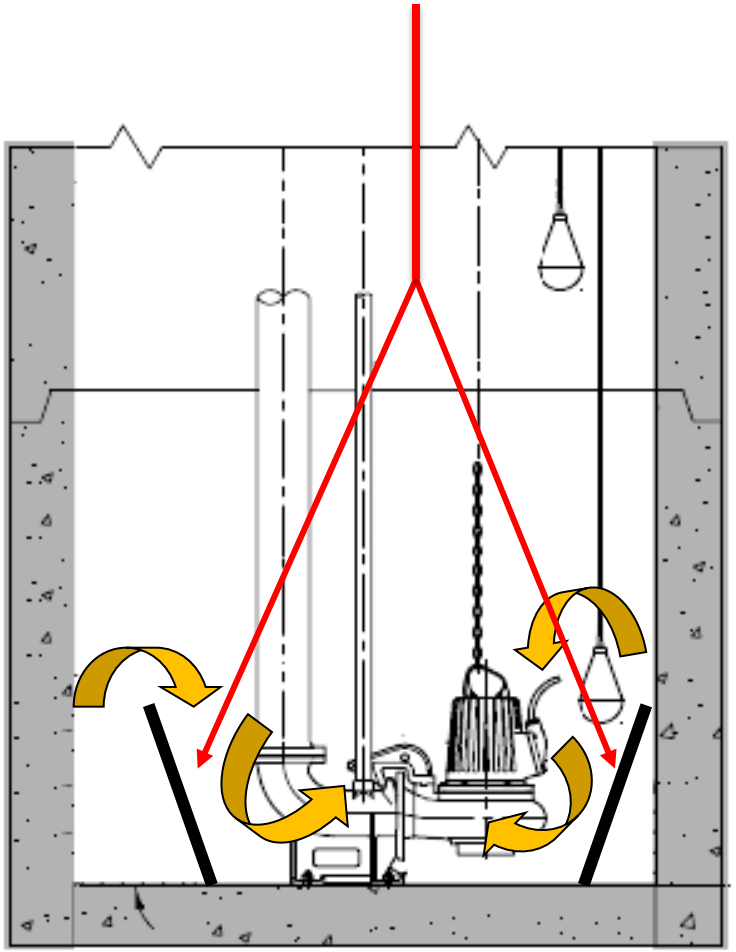

Result:

Power consumption increased 10% due to pre-swirl rotation

NEWEA
WORKING FOR WATER QUALITY

Innovative Technology: Self-cleaning wetwell

Modification 3:

Four vertical walls surround pump

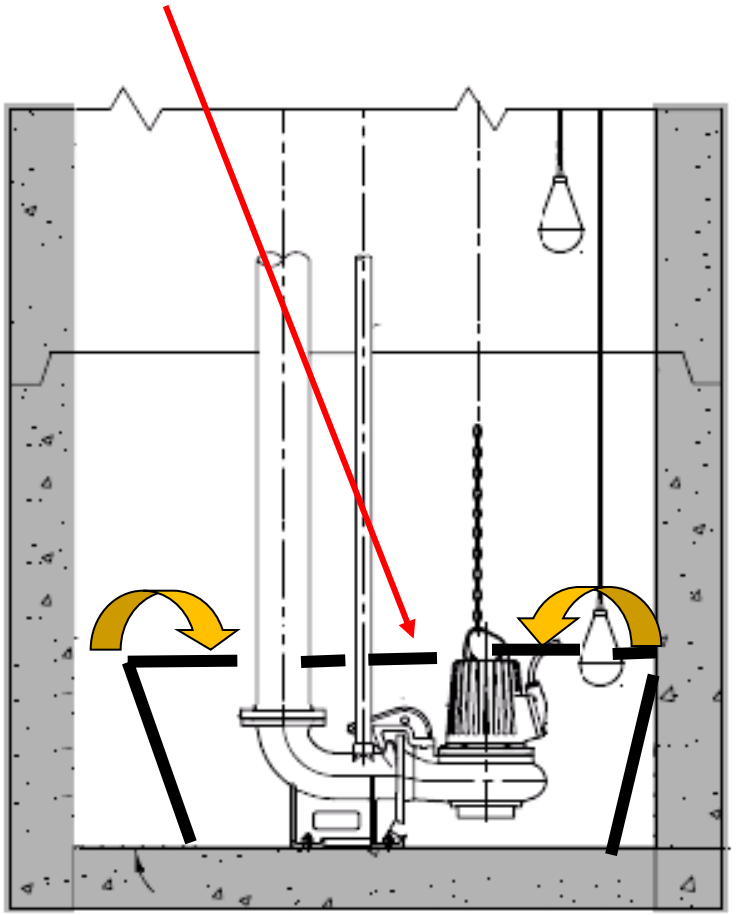

Result:
Slight decrease in power consumption, higher n_{hyd}%; no rotation around pump

NEWEA
WORKING FOR WATER QUALITY

Innovative Technology: Self-cleaning wetwell

Cantilever type

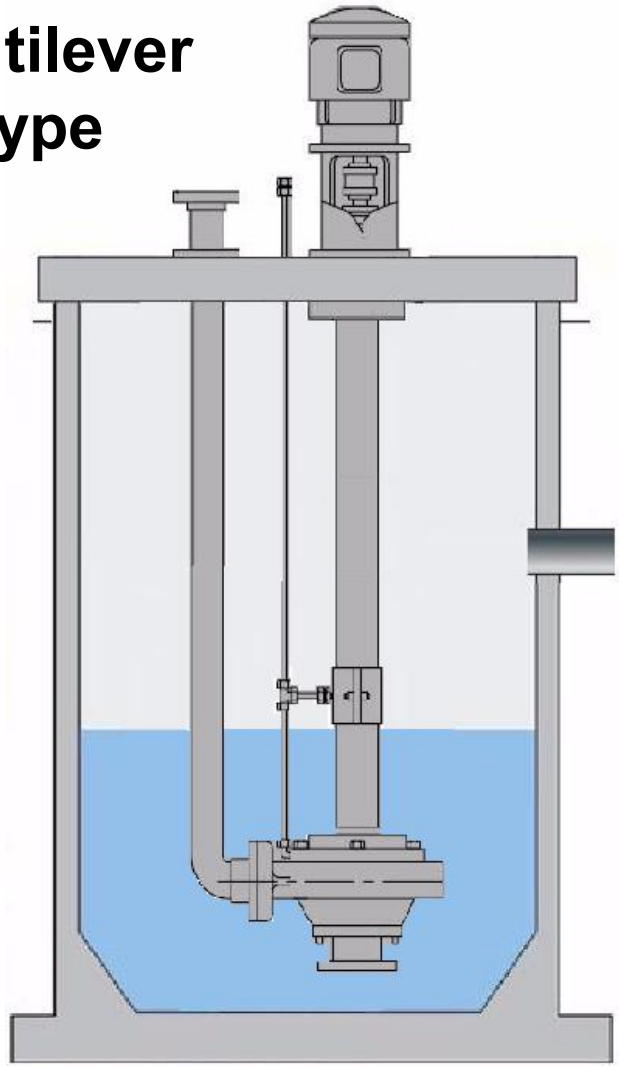

Submersible type

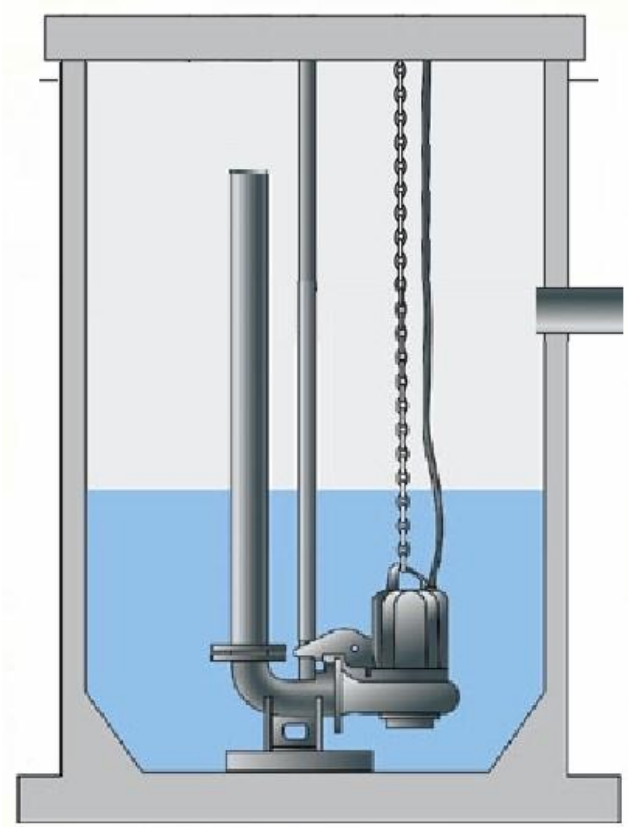

NEWEA
WORKING FOR WATER QUALITY

Innovative Technology: Self-cleaning wetwell

Cantilever type

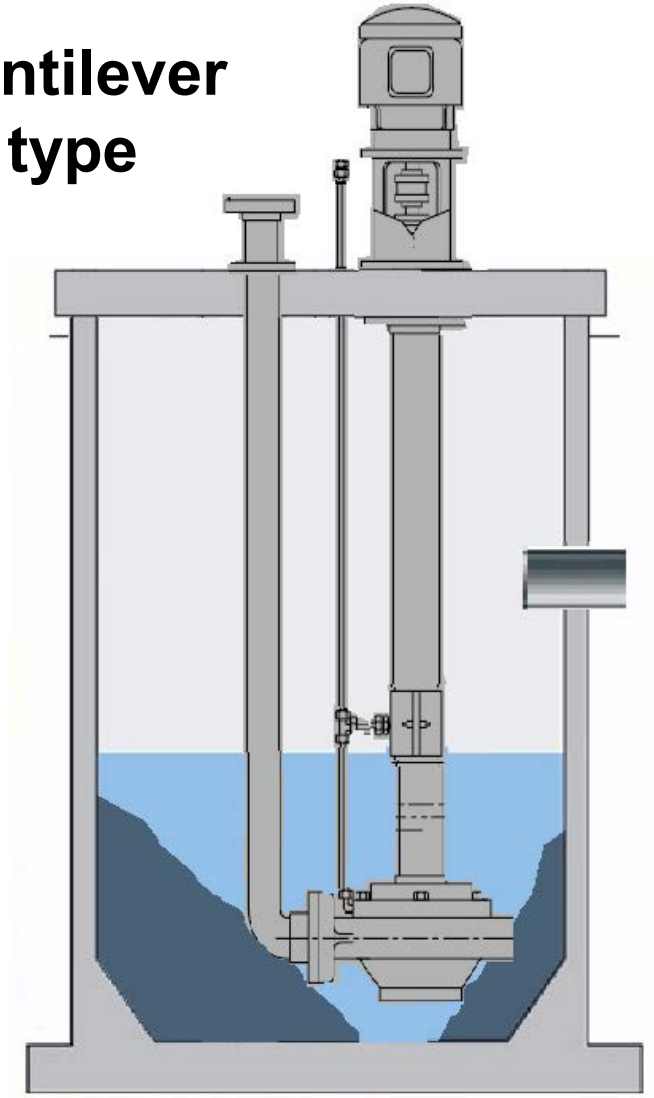

Submersible type

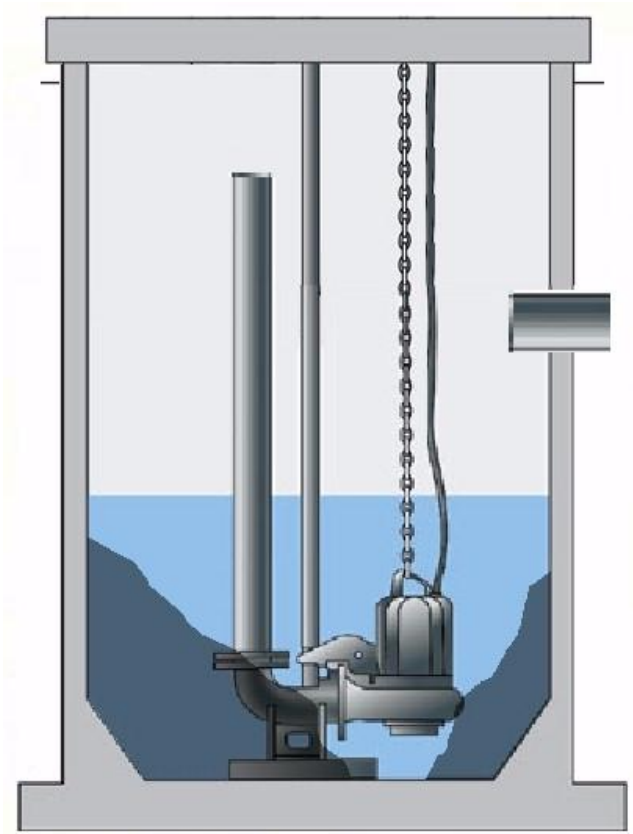

NEWEA
WORKING FOR WATER QUALITY

Adapting circular sumps to sewage solids

Various densities of solids enter wet wells:

- Floating solids form surface blankets
- Sinking solids accumulate on sump floor in stagnant zones

- Solids can be removed from station if they come close enough to the influence of the pump intake
- The influence of the pump intake stretches only 2-3 inlet diameters for both floating and sinking solids

NEWEA
WORKING FOR WATER QUALITY

Adapting circular sumps to sewage solids
Development test #1 – Floating items

- Two wet well types are chosen for comparison
  - Conventional wet-well with 5’-4” diameter
  - TOP 100 wet-well

- Place 8 # of 2 types of plastic beads in each wet-well
  - Measure the mass of floating beads pumped out of a 5’-4” dia. sump and a TOP 100 sump
  - Fill each sump 12 x with 200 gal and empty the sump
  - Use pump-off level at the bottom of the volute

- Compare results from the two sumps

NEWEA
WORKING FOR WATER QUALITY

Adapting circular sumps to sewage solids

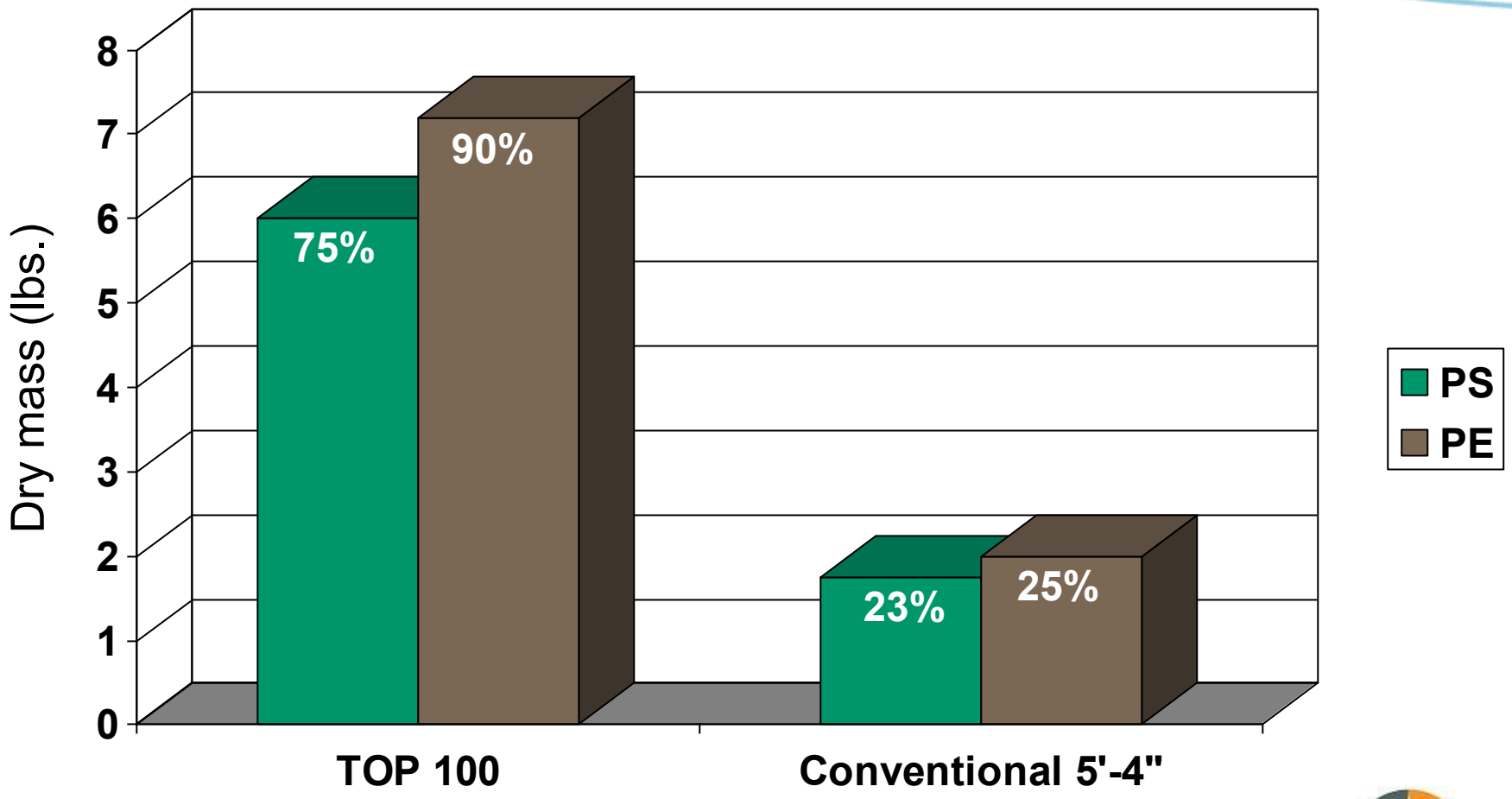

NEWEA
WORKING FOR WATER QUALITY

Adapting circular sumps to sewage solids
Developmental test #2 – Sanitary items

- Two wet-well situations are chosen for comparison
  - TOP 100 wet-well
  - TOP 100 wet-well along with sump mixing device

- 200 gallons of water were introduced each cycle
  - Sump was filled / emptied in 12 cycles
  - Compare results of the tests

NEWEA
WORKING FOR WATER QUALITY

Adapting circular sumps to sewage solids

TOP sump, pumps w/o sump mixing device

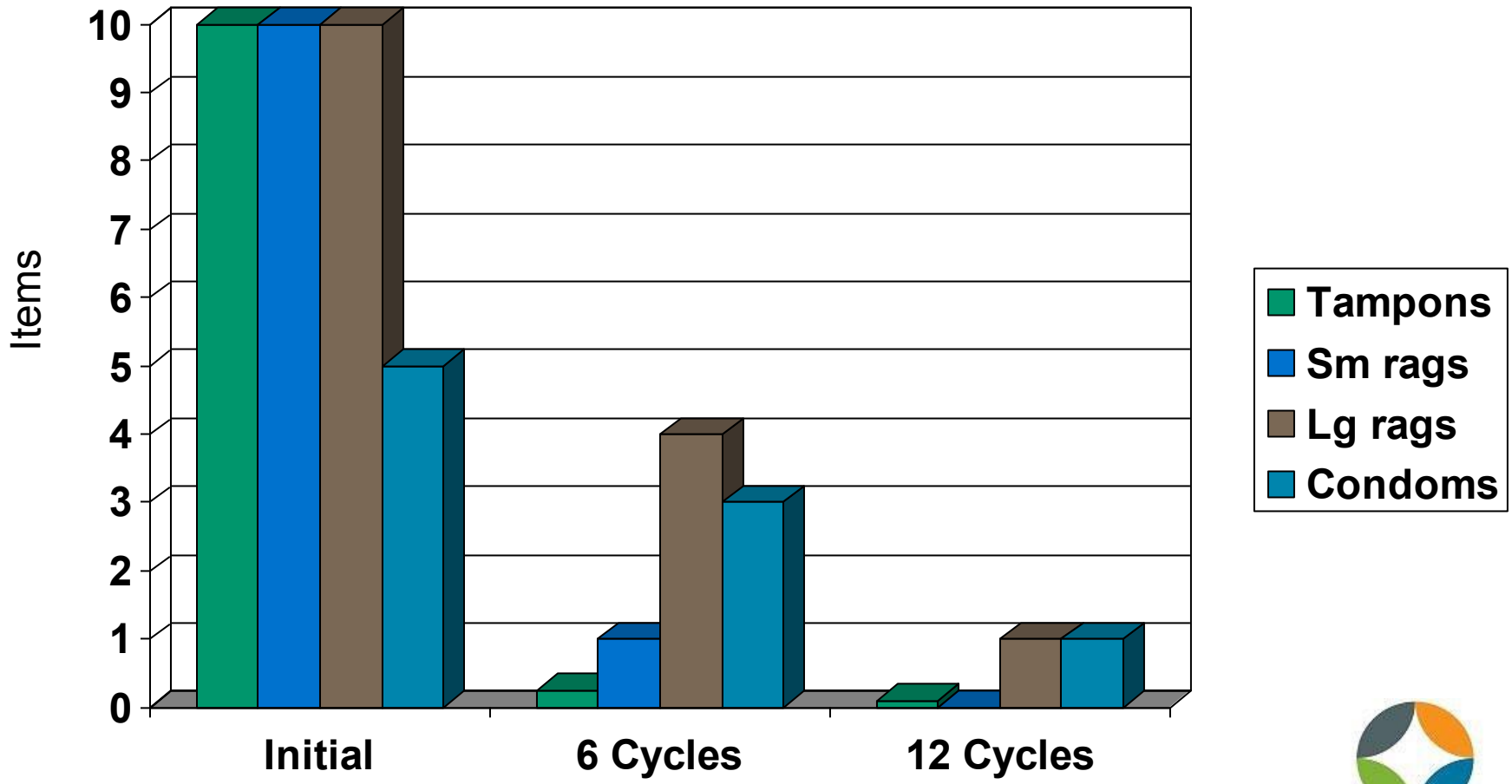

NEWEA
WORKING FOR WATER QUALITY

Adapting circular sumps to sewage solids

TOP sump, pumps with sump mixing device

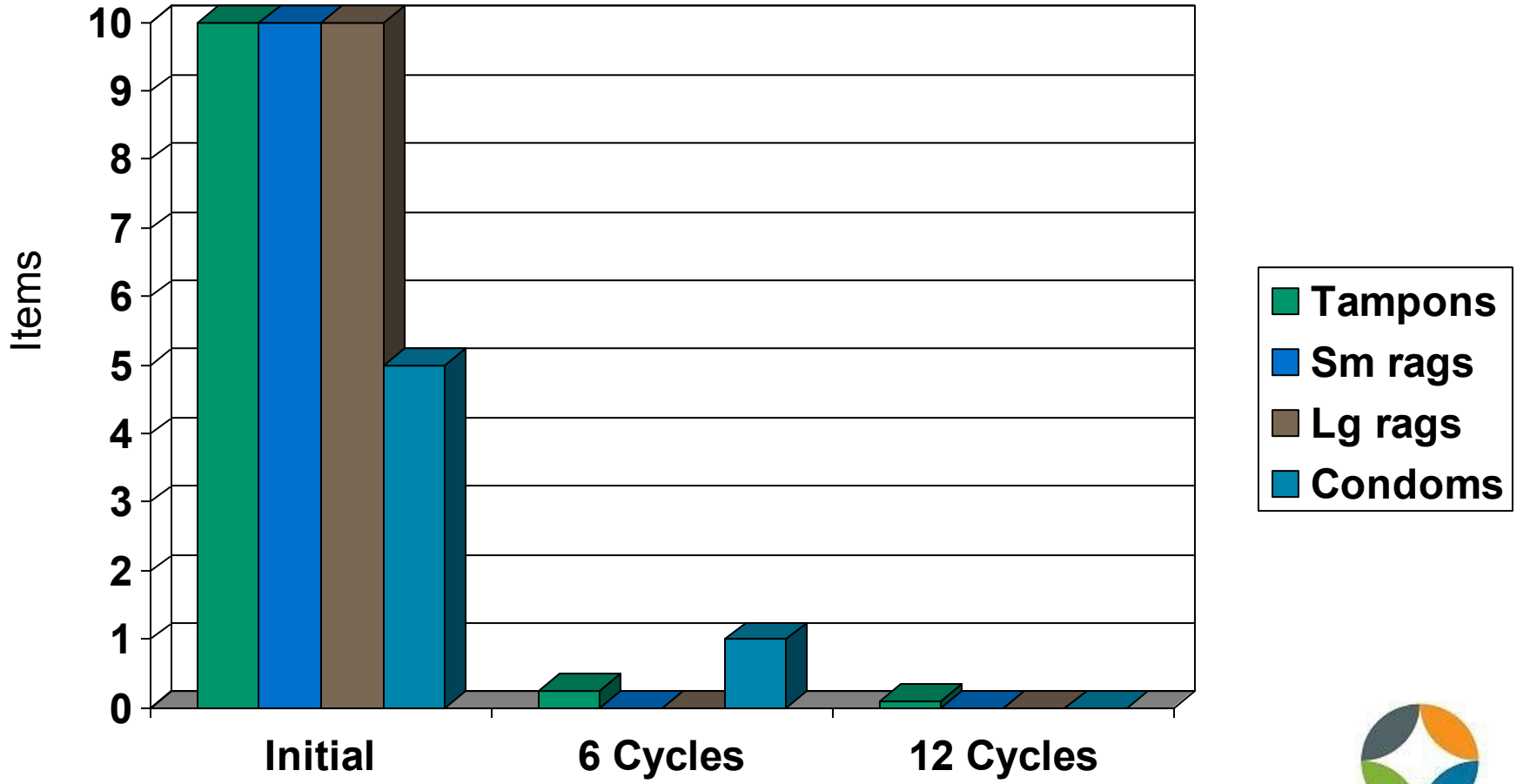

NEWEA
WORKING FOR WATER QUALITY

Adapting circular sumps to sewage solids
Developmental test #3 – Sand / grit settling solids

- Two wet wells are chosen and inter-connected
  - Conventional 5’-4” diameter wet well
  - TOP 100 wet well

- 110 pounds of sand and floating plastics are placed into each wet-well (220 total pounds)
  - The system is filled with 200 gallons of water
  - Each wet well is emptied back into the other a total of 10 times each

NEWEA
WORKING FOR WATER QUALITY

Adapting circular sumps to sewage solids

5’-4” dia. wet-well

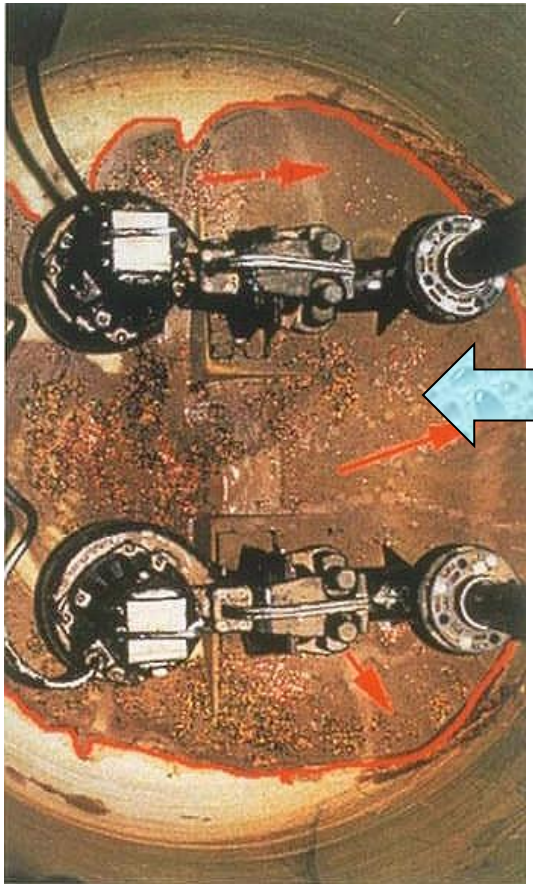

10 x

TOP 100 wet-well

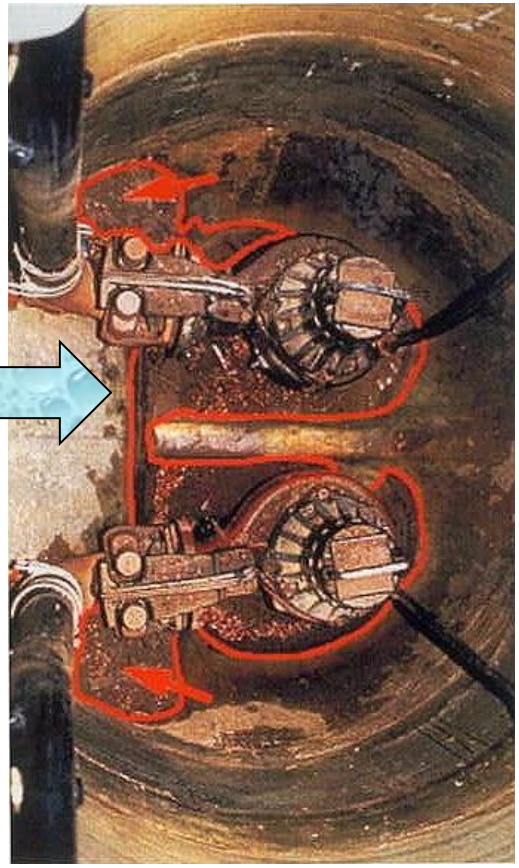

NEWEA
WORKING FOR WATER QUALITY

Adapting circular sumps to sewage solids

Conventional wet-well

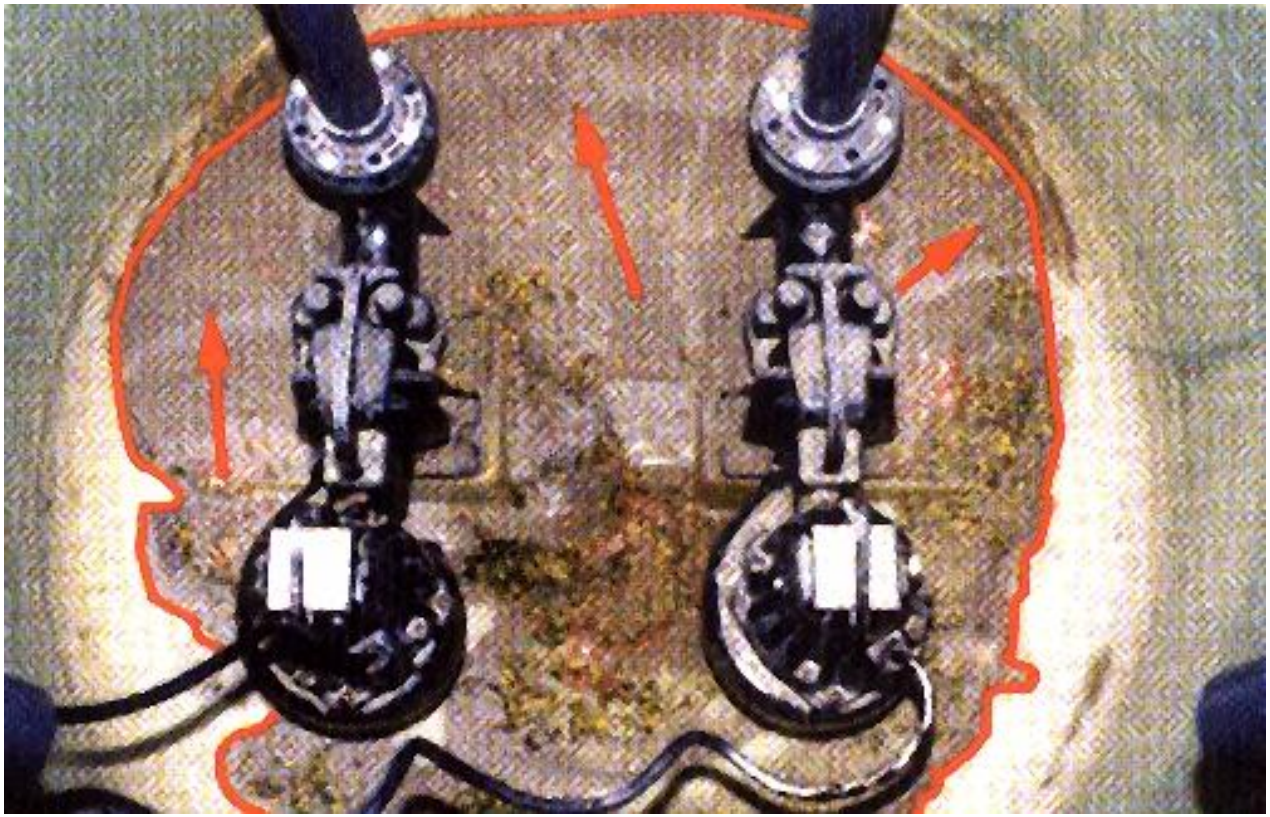

207 # of the sand remained in the conventional wet well

NEWEA
WORKING FOR WATER QUALITY

Adapting circular sumps to sewage solids

TOP 100 wet well

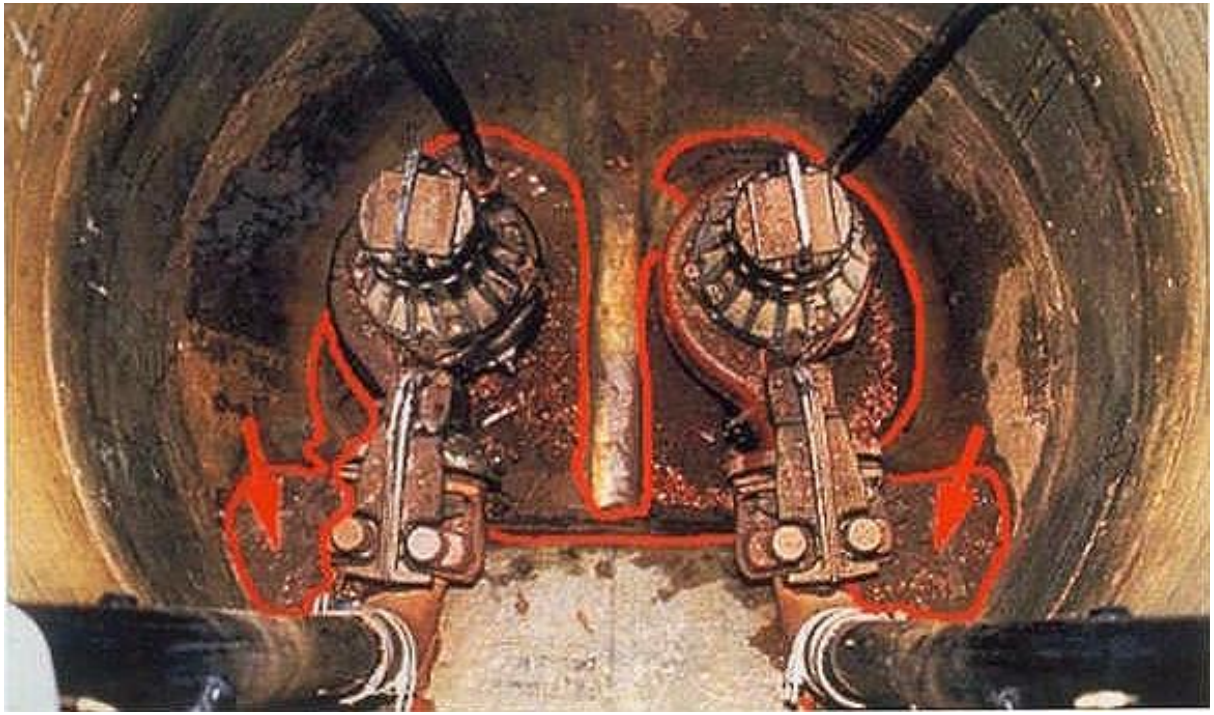

Just 3 # of sand remained in the TOP 100 wet well

NEWEA
WORKING FOR WATER QUALITY

Adapting circular sumps to sewage solids

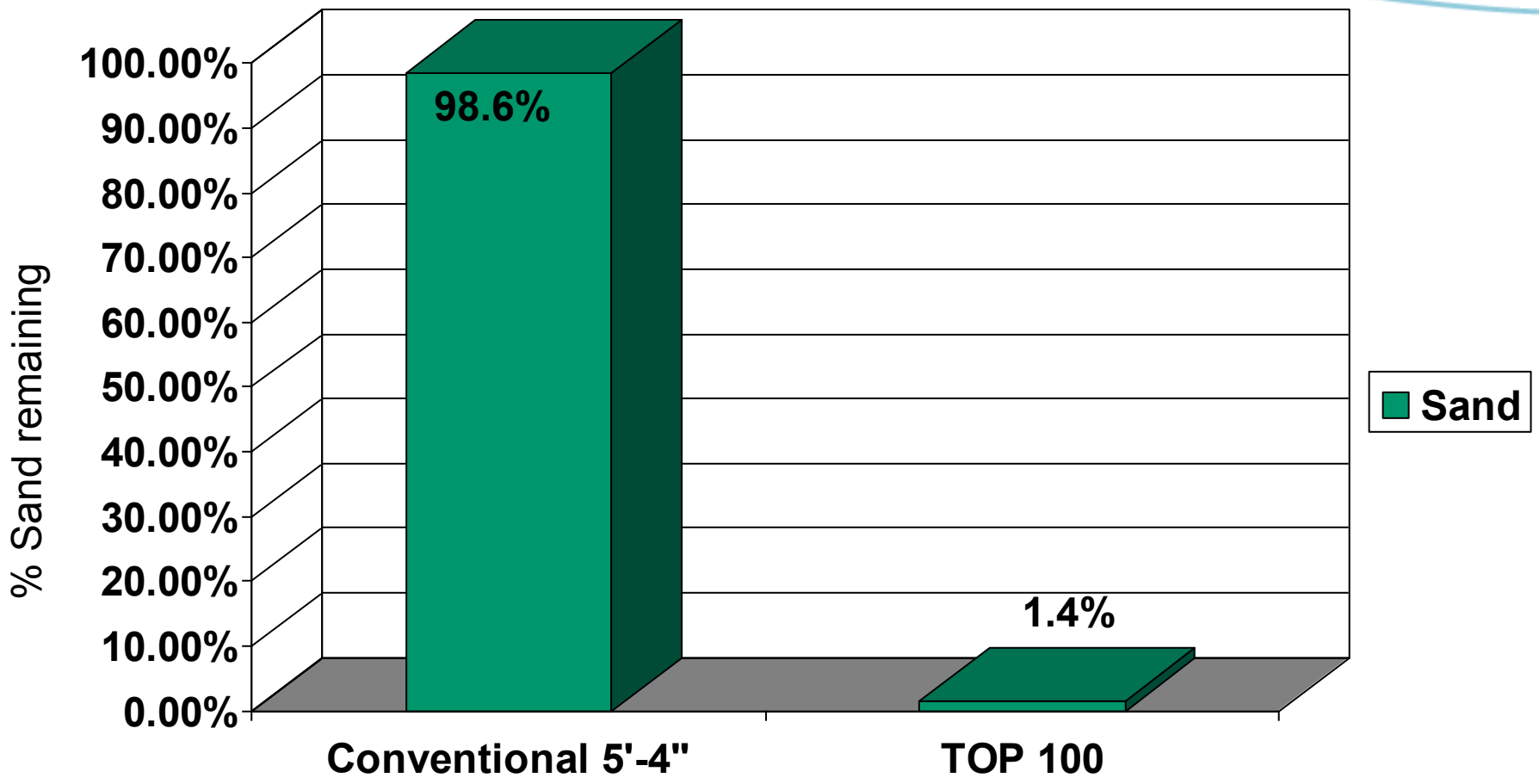

NEWEA
WORKING FOR WATER QUALITY

Innovative Technology: Self-cleaning wetwell

Program Conclusions 1

- TOP sump design proven to be more effective in transporting all types of tested solids than the conventional sump
- Difference was greatest for settling and floating solids
- Sump bottom was the most important characteristic to affect transport
- Pump stop level in also an important factor, lower levels provide greater floating solids transport

NEWEA
WORKING FOR WATER QUALITY

Innovative Technology: Self-cleaning wetwell

Program Conclusions 2

- Repeated pumping cycles at lower pump-off levels proved most effective
- Sump mixing device was effective in enhancing the transport of settling solids (sand, grit and sludge), especially in the conventional wet-well
- TOP sump proved even more effective in handling solids than the conventional wet-well equipped with a sump mixing device

NEWEA
WORKING FOR WATER QUALITY

Innovative Technology: Self-cleaning wetwell

Self-cleaning sumps: Installation types

- Retrofit applications
- Pre-engineered fiberglass pump stations
- Pre-engineered concrete pump stations

NEWEA
WORKING FOR WATER QUALITY

Innovative Technology: Self-cleaning wetwell

TOPS utilization

NEWEA
WORKING FOR WATER QUALITY

Innovative Technology: Self-cleaning wetwell

Retrofit application

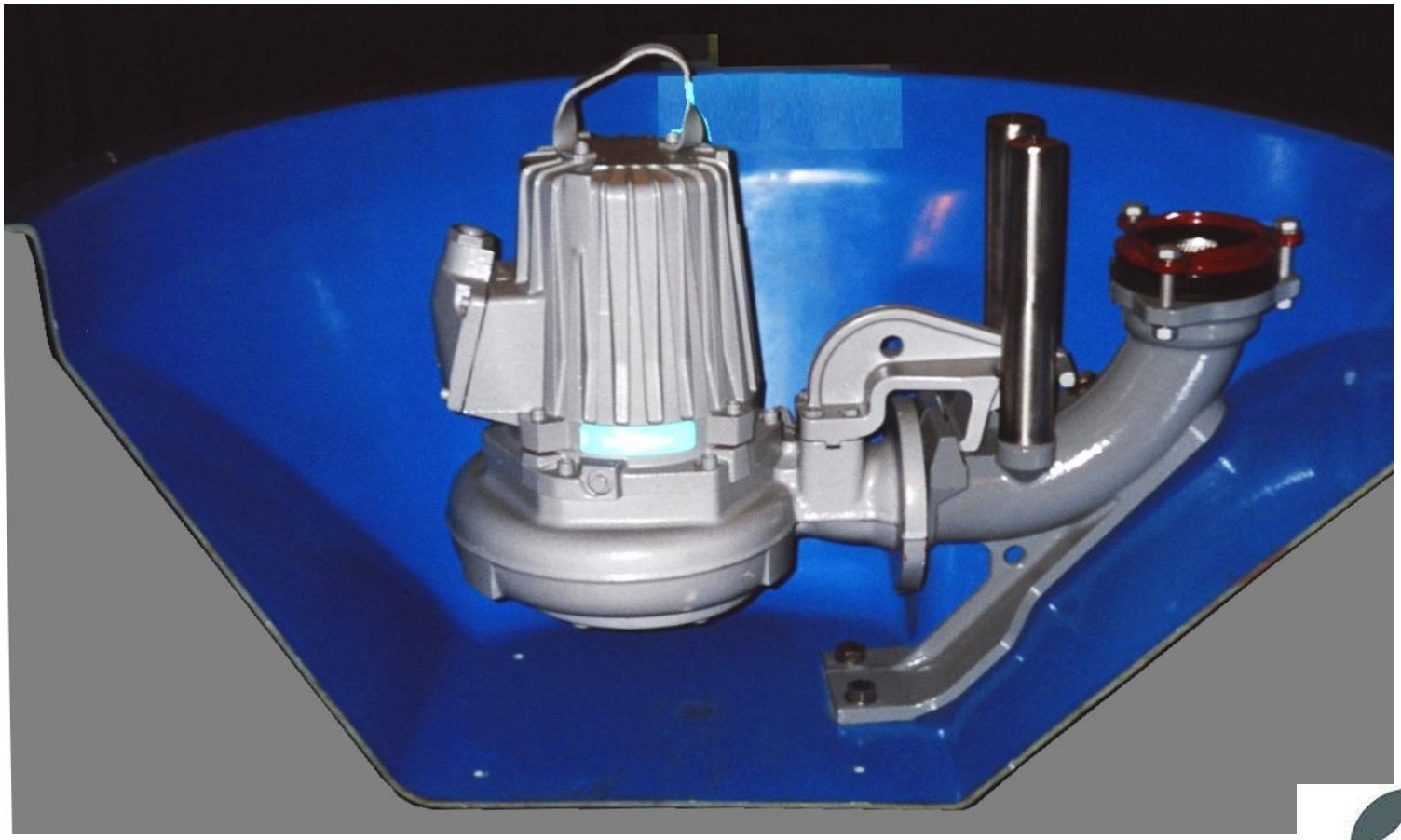

NEWEA
WORKING FOR WATER QUALITY

Innovative Technology: Self-cleaning wetwell

Upgrade an existing circular pump station

1. Remove station mechanicals.
2. Hose-clean and vacuum clean station interior

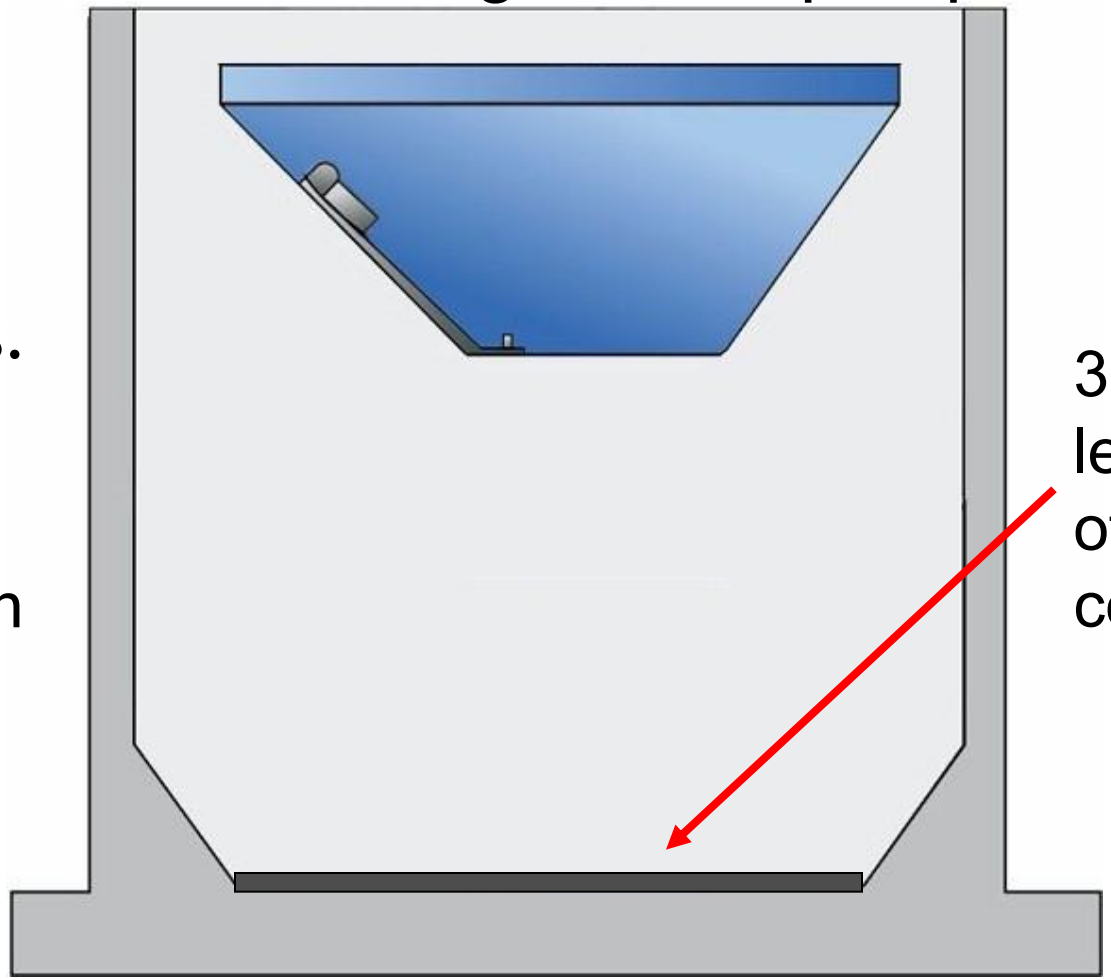

3. Lay leveling bed of fairly dry concrete

NEWEA
WORKING FOR WATER QUALITY

Innovative Technology: Self-cleaning wetwell

4. Lower TOP station insert onto stiff concrete base

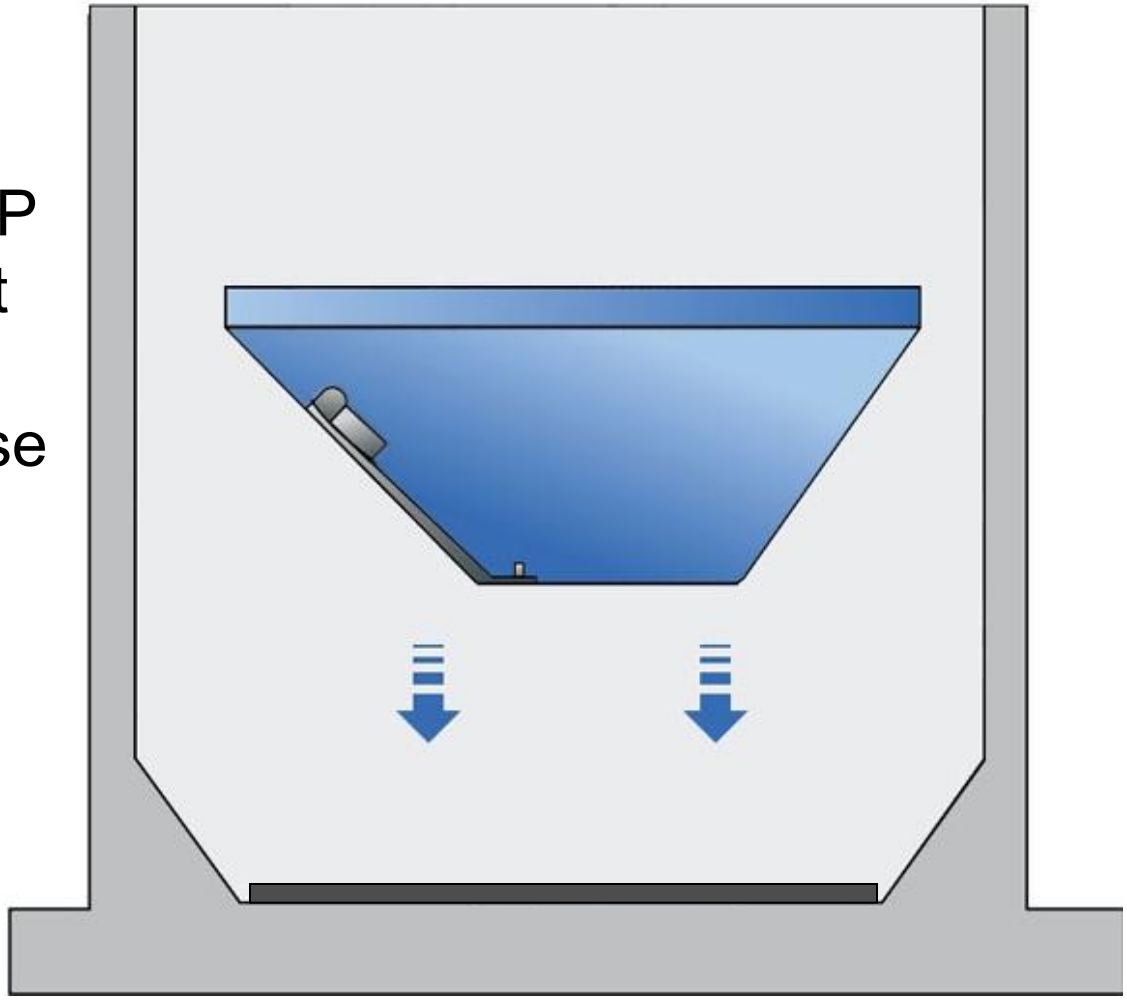

NEWEA
WORKING FOR WATER QUALITY

Innovative Technology: Self-cleaning wetwell

5. Seat and level basin.

6. Restrain basin

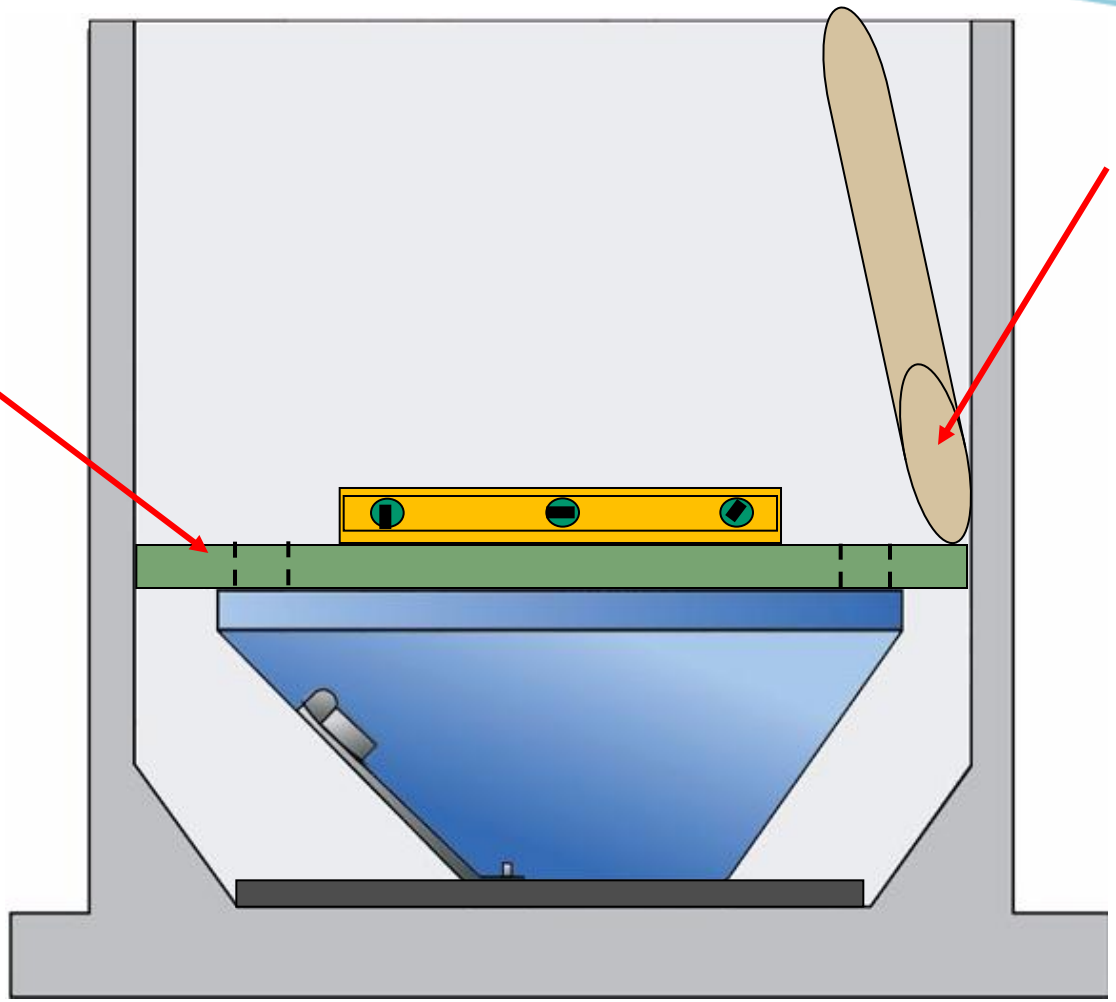

7. Fill void area with grout.

(~ 3 yds)

NEWEA
WORKING FOR WATER QUALITY

Innovative Technology: Self-cleaning wetwell

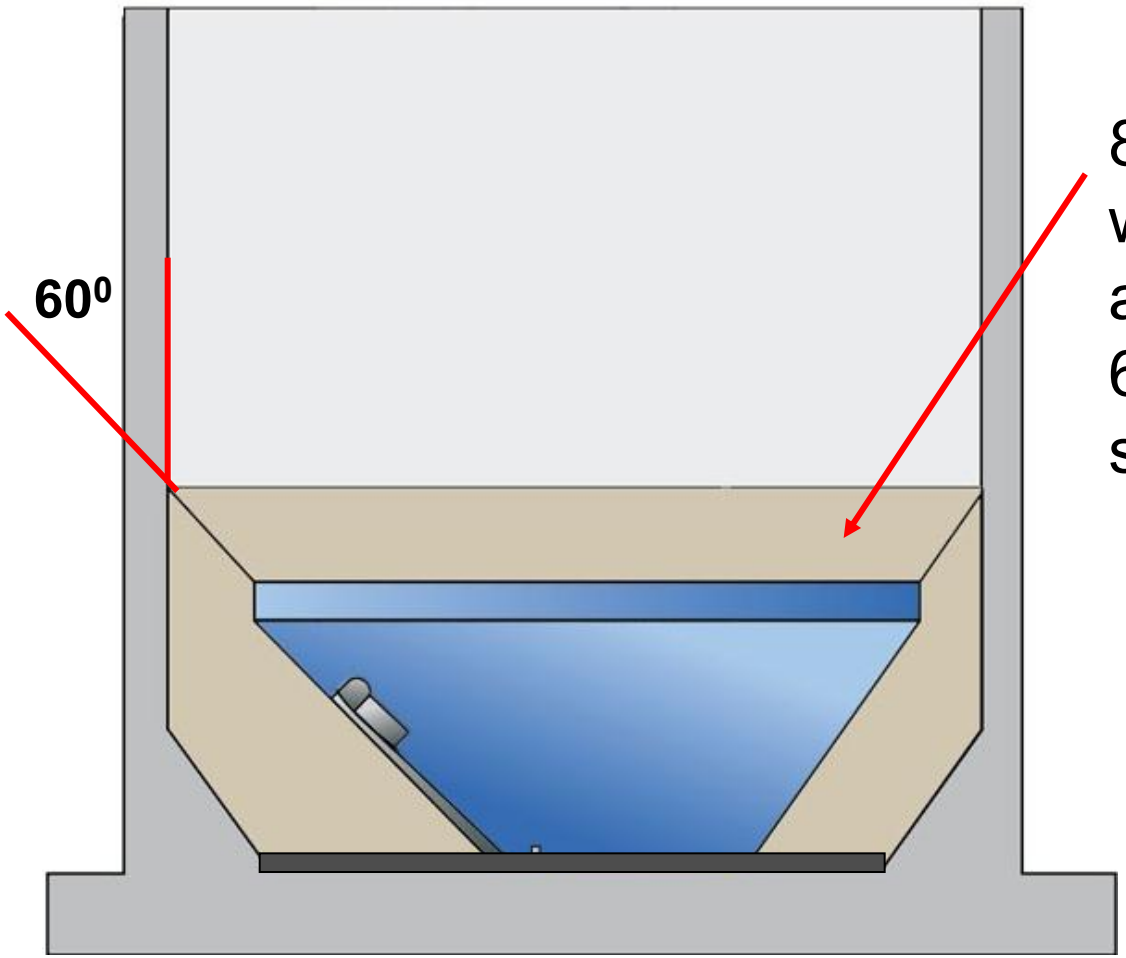

8. Finish with grout at 45^0 to 60^0 to PS side-wall

NEWEA
WORKING FOR WATER QUALITY

Innovative Technology: Self-cleaning wetwell

Completed station

9. Re-install piping and mechanical equipment

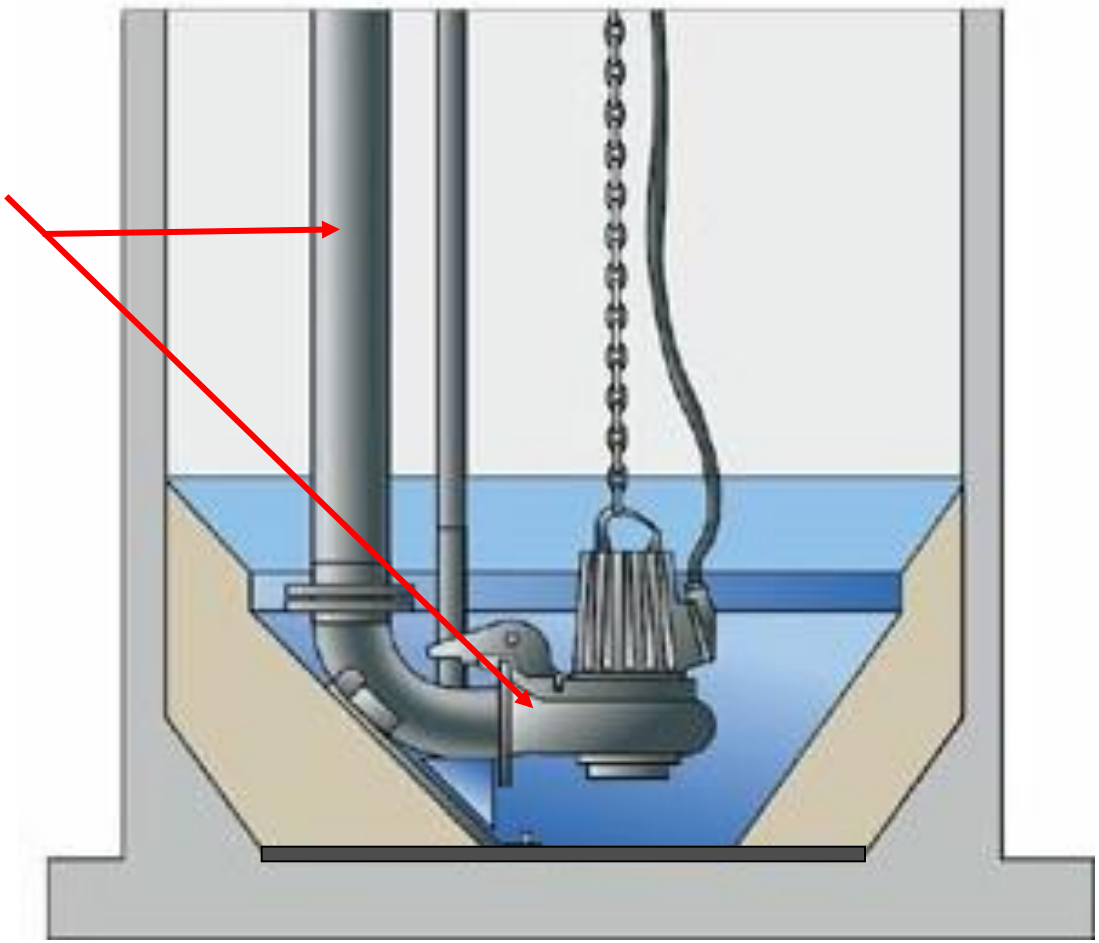

NEWEA
WORKING FOR WATER QUALITY

Innovative Technology: Self-cleaning wetwell

Plan view: Typical completed self-cleaning lift station retrofit

NEWEA
WORKING FOR WATER QUALITY

Innovative Technology: Self-cleaning wetwell

Before

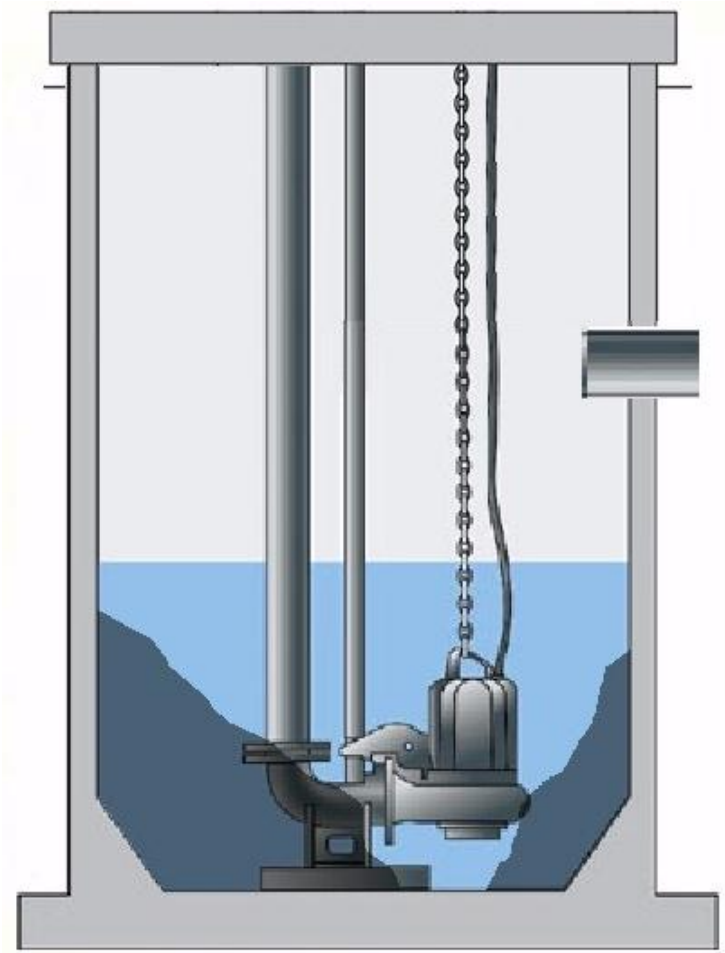

Completed Retrofit

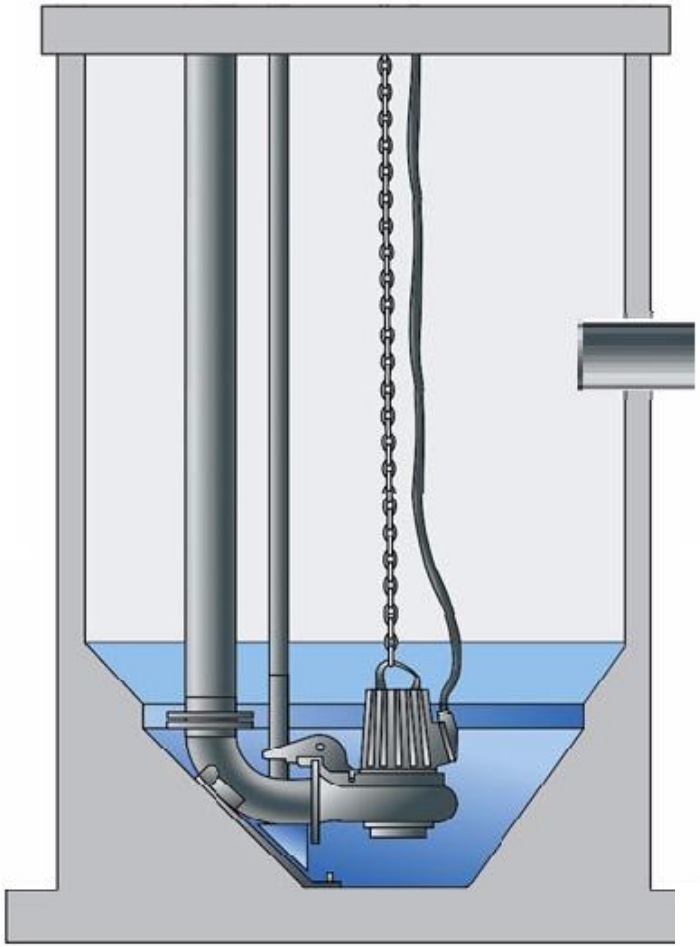

NEWEA
WORKING FOR WATER QUALITY

Innovative Technology: Self-cleaning wetwell

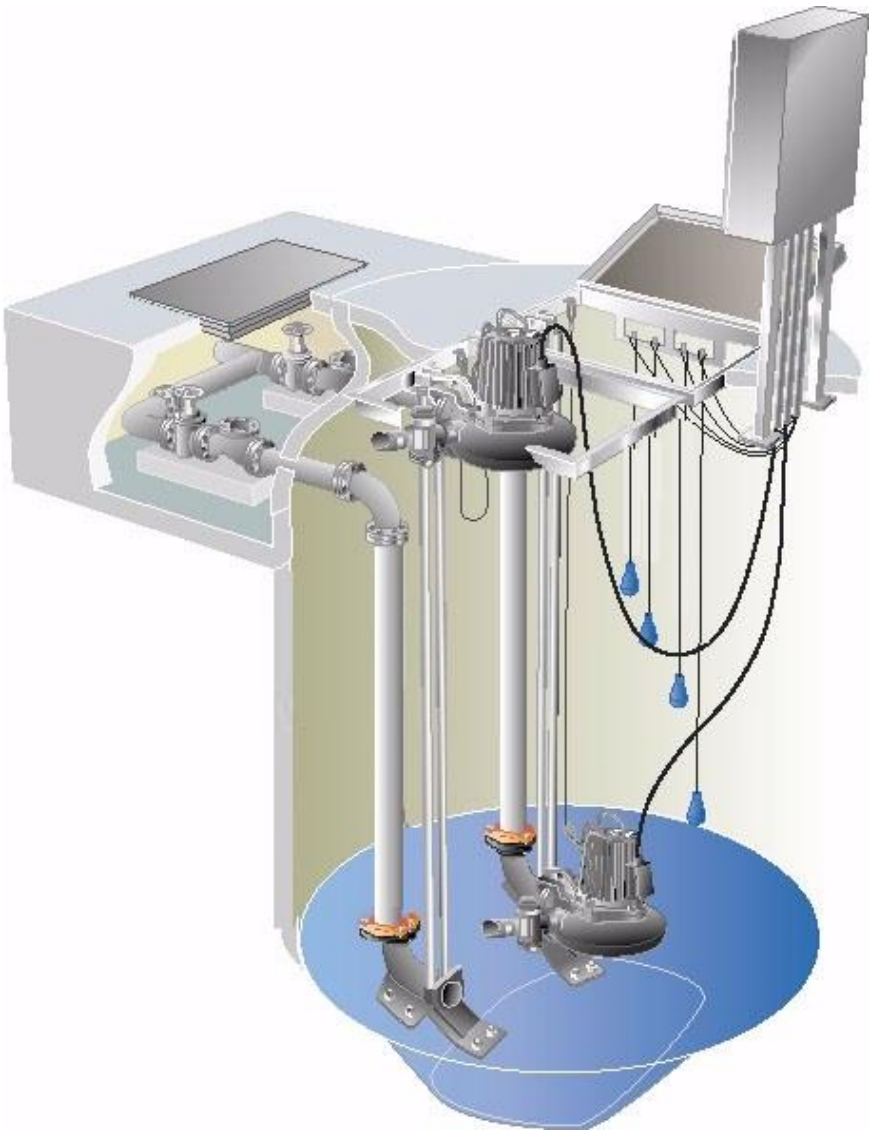

Self-Cleaning
Current new construction, utilization methods

NEWEA
WORKING FOR WATER QUALITY

Innovative Technology: Self-cleaning wetwell

Fiberglass pre-engineered pump station

NEWEA
WORKING FOR WATER QUALITY

Innovative Technology: Self-cleaning wetwell

Concrete pre-engineered pump station

NEWEA
WORKING FOR WATER QUALITY

Innovative Technology: Self-cleaning wetwell

Conclusions 1

- The IT sump design has proven to be far more effective in transporting all types of solids and rags than the traditional circular sump.
- The IT sump exhibited the greatest sump improvement: removal of floating type and settling type solids
- Sump diameter and bottom configuration are the characteristics that most affect the transport of solids

NEWEA
WORKING FOR WATER QUALITY

Innovative Technology: Self-cleaning wetwell

Conclusions 2

- Pump off levels are an important factor in maintaining a clean wet-well
- The lower the sump level, the greater the amount of solids that are transported
- Repeated cycles of low pump-off levels proved to be most effective

NEWEA
WORKING FOR WATER QUALITY

Innovative Technology: Self-cleaning wetwell

Conclusions 3

- A sump mixing device was very effective in enhancing the transport of settling solids and the prevention of grease build-up in the station
- The benefits of sump mixing were greatest in the traditional large diameter, flat bottom design sump

NEWEA
WORKING FOR WATER QUALITY

Innovative Technology: Self-cleaning wetwell

Conclusions 4

- The IT sump w/o sump mixing device was significantly more effective at handling solids than the traditional sump
- The IT sump was even more effective when the mixing device was employed

NEWEA
WORKING FOR WATER QUALITY

Innovative Technology: Self-cleaning wetwell

Sump design recommendations for common circular concrete wet well

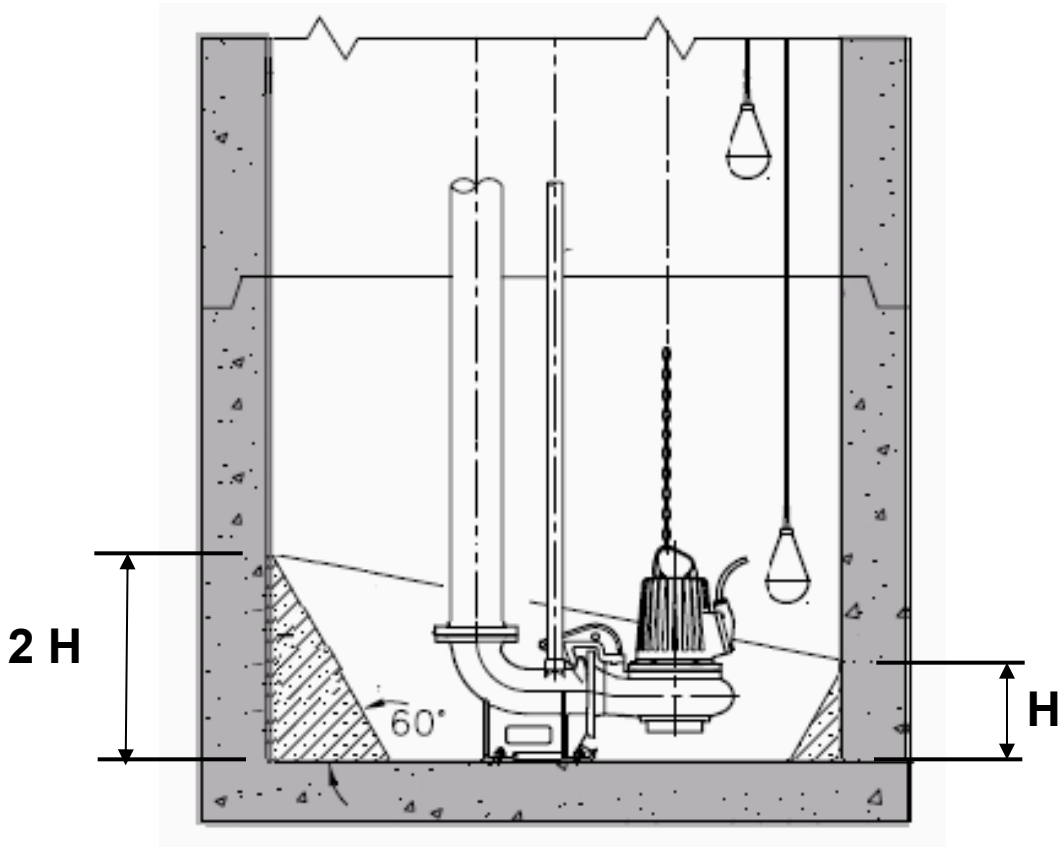

Elevation view

NEWEA
WORKING FOR WATER QUALITY

Innovative Technology: Self-cleaning wetwell

Sump design recommendations for common circular concrete wet well

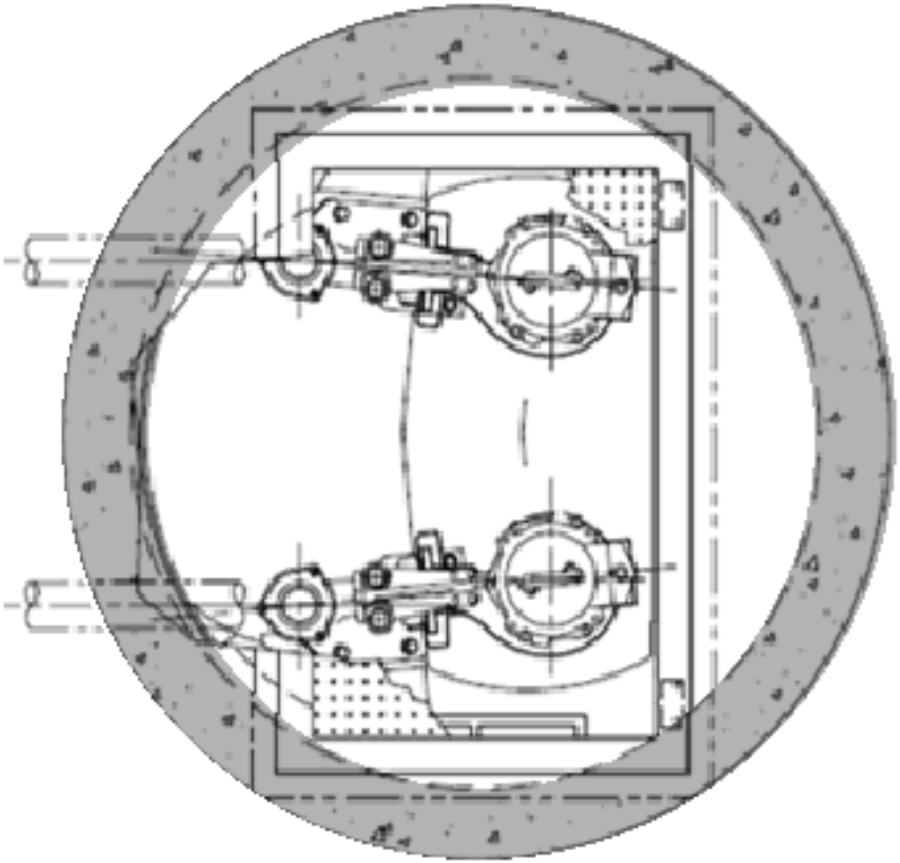

Plan view

FLYGT
a xylem brand

Innovative Technology: Self-cleaning wetwell

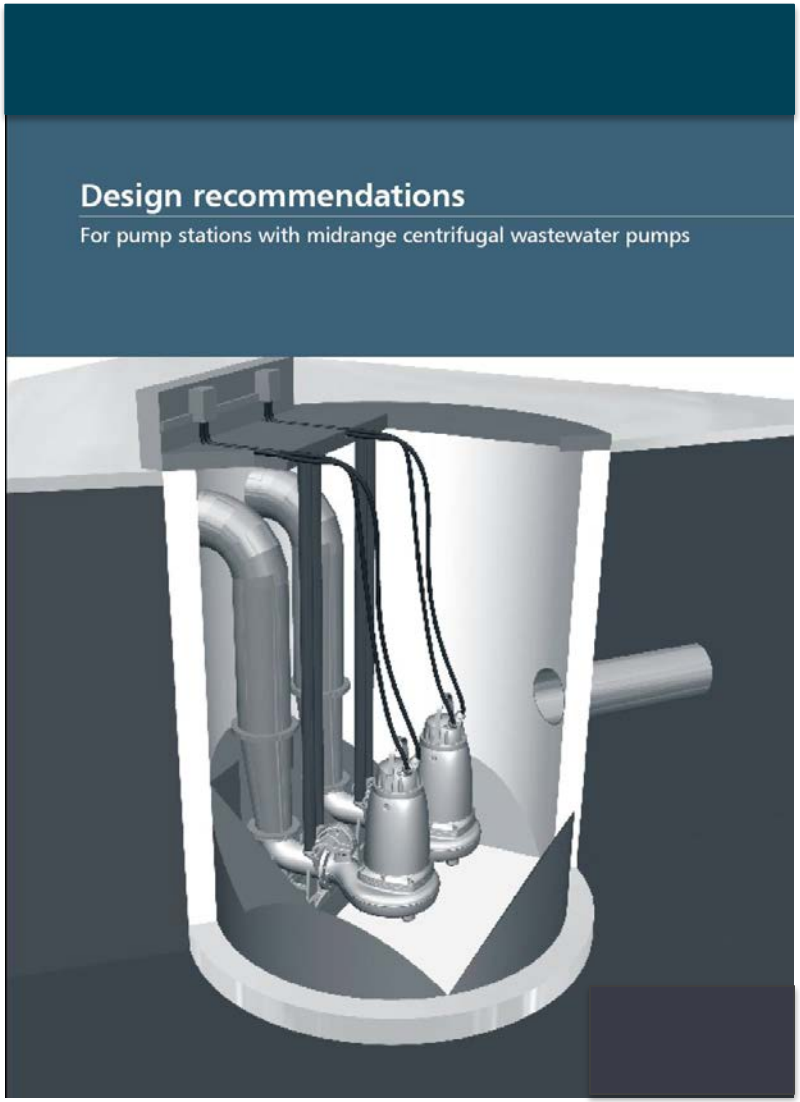

NEWEA
WORKING FOR WATER QUALITY

Innovative Technology: Self-cleaning wetwell

Question and Answer Period

NEWEA
WORKING FOR WATER QUALITY

January 28, 2015

FLYGT
a xylem brand

Innovative Technology: Development of the Self-cleaning Wet-well

Robert Domkowski
Engineering Consultant

NEW ENGLAND WATER ENVIRONMENT ASSOCIATION
NEWEA
WORKING FOR WATER QUALITY